COASTAL PERFORMANCE™
by Sunrise Windows, LTD.

Series 7250 Coastal Performance Fixed Window

"IMPACT"

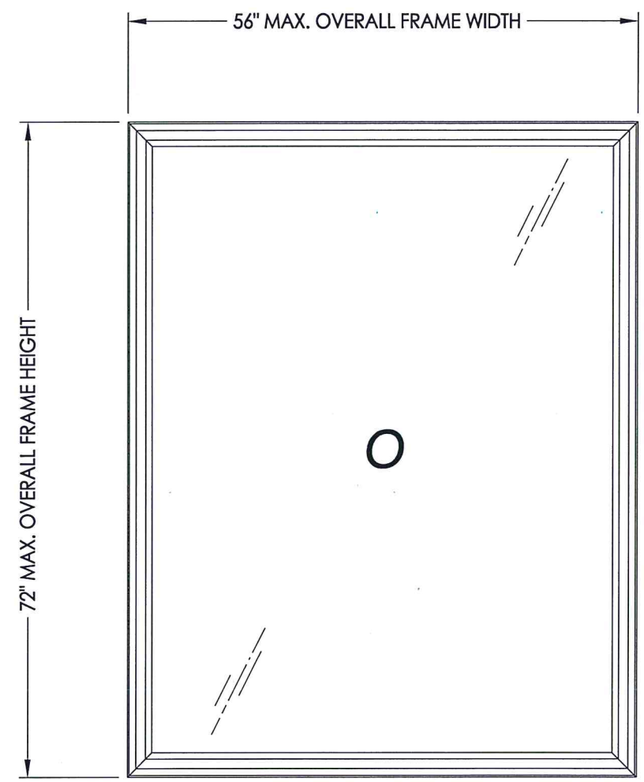

GENERAL NOTES

1. This product has been evaluated and is in compliance with the 6th Edition (2017) Florida Building Code (FBC) structural requirements excluding the "High Velocity Hurricane Zone" (HVHZ).

2. Product anchors shall be as listed and spaced as shown on details. Anchor embedment to base material shall be beyond wall dressing or stucco.

3. When used in areas requiring wind borne debris protection this product complies with FBC Sections 1609.1.2 & R301.2.1.2 and does not require an impact resistant covering. This product meets missile level "D" and includes Wind Zone 3 as defined in ASTM E1996 and FBC Sections 1609.1.2.2 & R301.2.1.2.1.

4. For 2x stud framing construction, anchoring of these units shall be the same as that shown for 2x buck masonry construction.

5. Site conditions that deviate from the details of this drawing require further engineering analysis by a licensed engineer or registered architect.

TABLE OF CONTENTS	
SHEET #	DESCRIPTION
1	Typical elevations, design pressures & general notes
2	Vertical & horizontal cross sections
3	Buck & frame anchoring
4	Bill of materials, components & glazing details

MAX. OVERALL FRAME DIMENSION	MAX DAY LITE DIMENSION (FIXED)	GLASS TYPE	DESIGN PRESSURE (PSF)	
			POS.	NEG.
56.0" X 72.0"	50.5" x 66.63"	G1	+50.0	-50.0

L. F. SCHMIDT LICENSE No. 43409 STATE OF FLORIDA PROFESSIONAL ENGINEER
4-17-18

Documents Prepared By:
Lyndon F. Schmidt
P.E. No. 43409

RW BUILDING CONSULTANTS, INC.
P.O. Box 230, Valrico, FL 33595
Phone No.: 813.659.9197
FBPE C.A. No. 9813

PRODUCT: FIXED WINDOW

PART OR ASSEMBLY: TYPICAL ELEVATION, DESIGN PRESSURES & GENERAL NOTES

REVISIONS

NO.	DATE	BY

DATE: 4/17/18
SCALE: N.T.S.
DWG. BY: JK
CHK. BY: LFS
DRAWING NO.: FL-26908.1
SHEET 1 OF 4

© 2018 R.W. BUILDING CONSULTANTS INC.

R:\Clients\Sunrise Windows\A - Florida Product Approvals\FL-26908 - 7250 Fixed Coastal Window\C - Drawings\FL 26908 (2017)\FL-26908.dwg, FL-26908.1

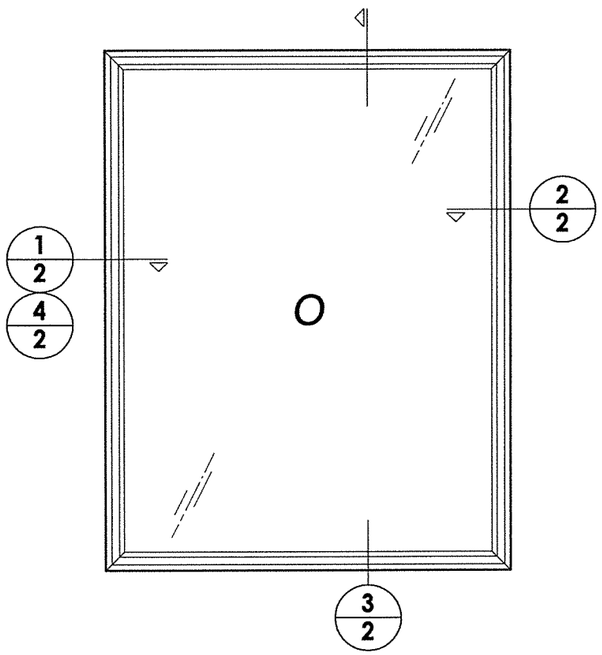

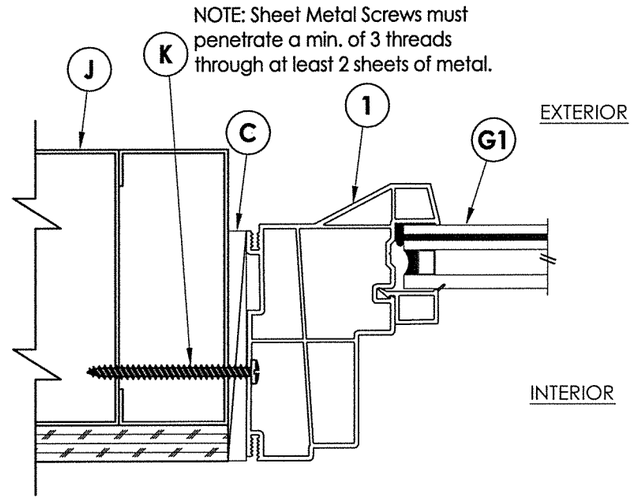

4/2 HORIZONTAL CROSS SECTION
Metal Stud Construction

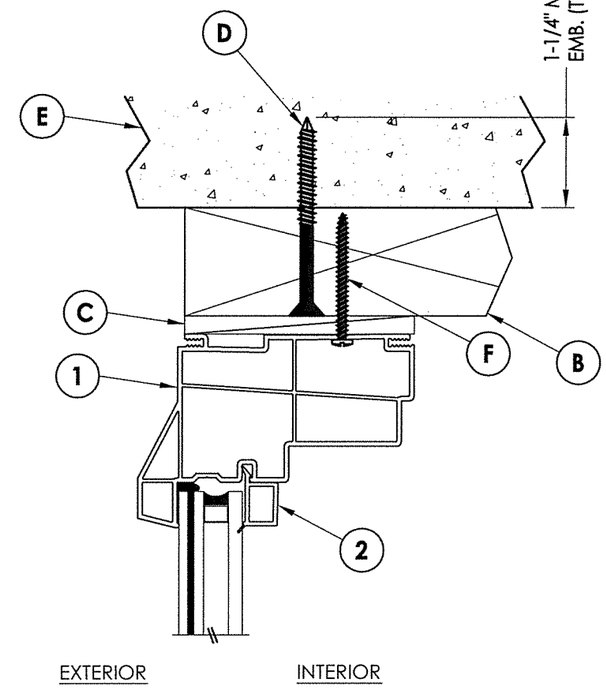

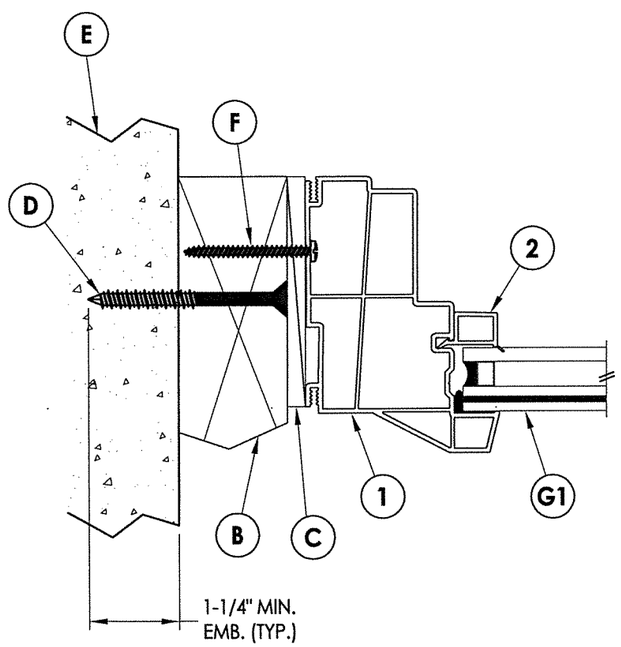

1/2 HORIZONTAL CROSS SECTION
2X Buck Masonry Construction

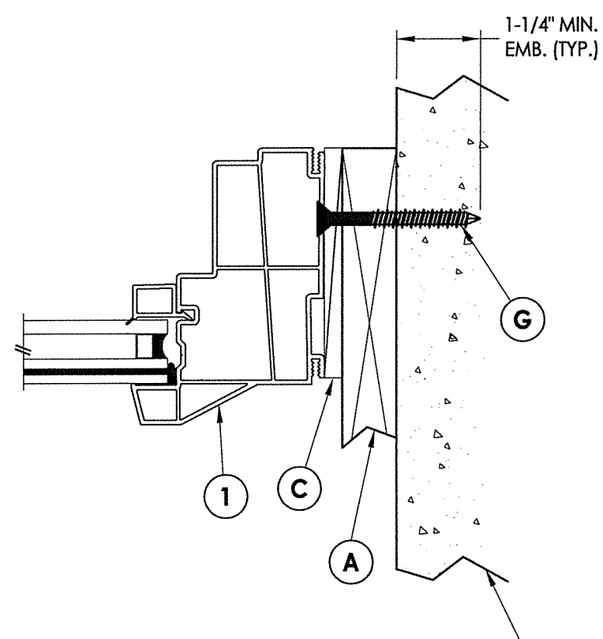

2/2 HORIZONTAL CROSS SECTION
1X Buck Masonry Construction

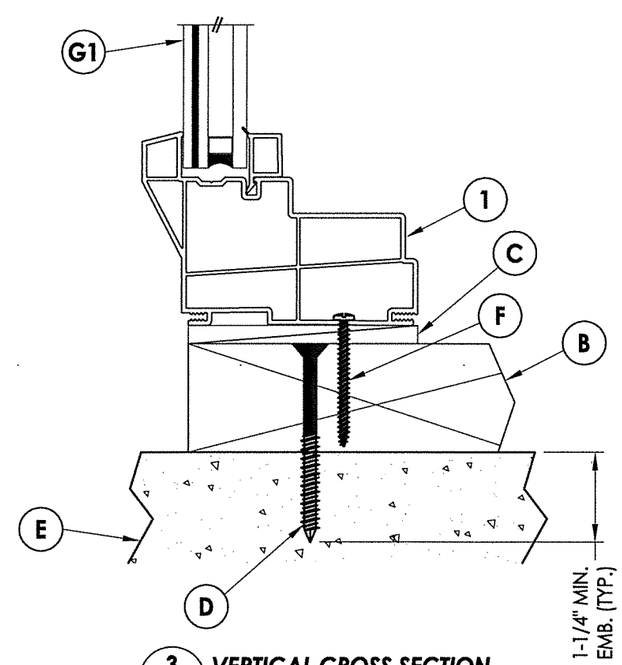

3/2 VERTICAL CROSS SECTION
2X Buck Masonry Construction

L. F. SCHMIDT
LICENSE
No. 43409
STATE OF FLORIDA
PROFESSIONAL ENGINEER

Documents Prepared By:
Lyndon F. Schmidt
P.E. No. 43409

BUILDING CONSULTANTS, INC.
P.O. Box 230, Valrico, FL 33595
Phone No.: 813.659.9197
FBPE C.A. No. 9813

PRODUCT: FIXED WINDOW

PART OR ASSEMBLY: VERTICAL & HORIZONTAL CROSS SECTIONS

NO.	DATE	BY

REVISIONS

DATE: 4/17/18
SCALE: N.T.S.
DWG. BY: JK
CHK. BY: LFS
DRAWING NO.: FL-26908.1
SHEET 2 OF 4

© 2018 R.W. BUILDING CONSULTANTS INC.

R:\Clients\Sunrise Windows\A - Florida Product Approvals\FL-26908 - 7250 Fixed Coastal Window\C - Drawings\FL 26908 (2017)\FL-26908.dwg, 2-5

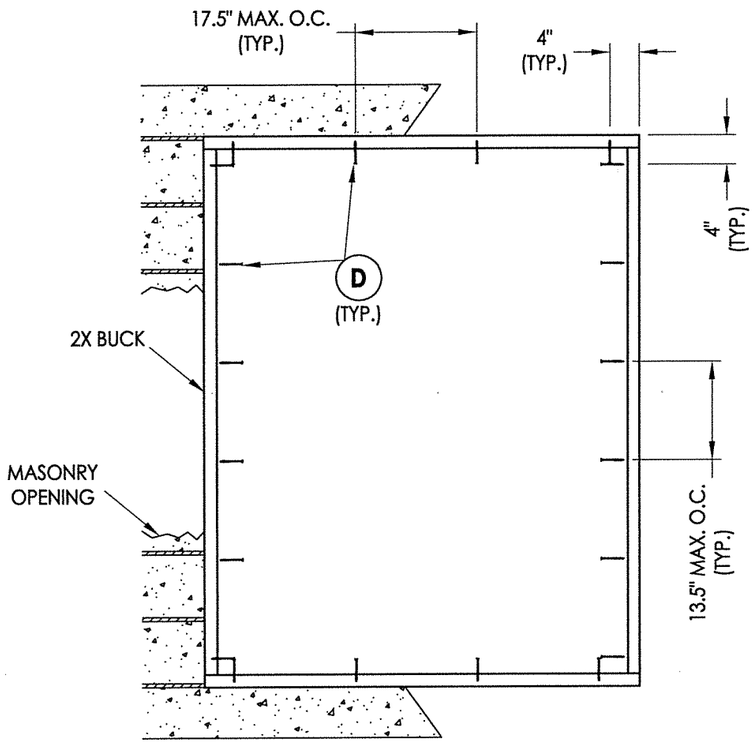

BUCK ANCHORING

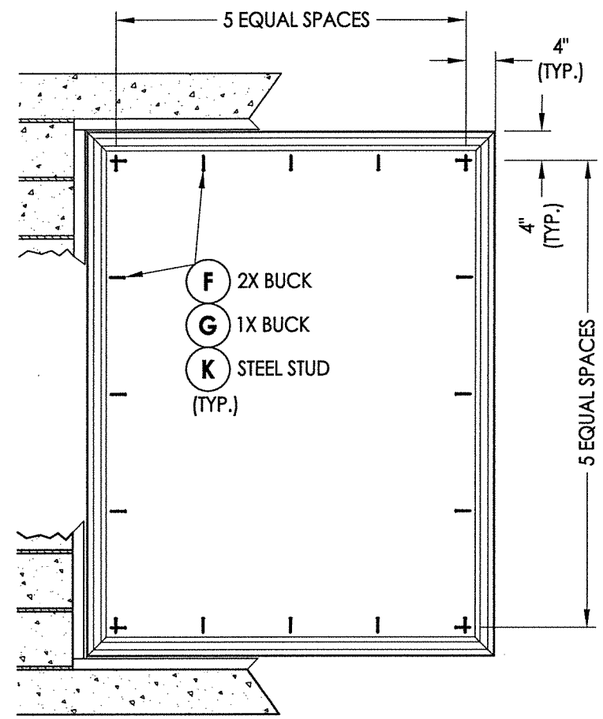

FRAME ANCHORING

CONCRETE ANCHOR NOTES:

1. *Concrete anchor locations at the corners may be adjusted to maintain the min. edge distance to mortar joints.*
2. *Concrete anchor locations noted as "MAX. ON CENTER" must be adjusted to maintain the min. edge distance to mortar joints, additional concrete anchors may be required to ensure the "MAX. ON CENTER" dimension are not exceeded.*
3. *Concrete anchor table:*

ANCHOR TYPE	ANCHOR SIZE	MIN. EMBEDMENT	MIN. CLEARANCE TO MASONRY EDGE	MIN. CLEARANCE TO ADJACENT ANCHOR
ITW TAPCON®	1/4"	1-1/4"	2"	4"
ELCO ULTRACON®	1/4"	1-1/4"	1"	4"

WOOD SCREW INSTALLATION NOTES:

1. *Maintain a minimum 5/8" edge distance, 1" end distance, & 1" o.c. spacing of wood screws to prevent the splitting of wood.*

L. F. SCHMIDT LICENSE No. 43409 STATE OF FLORIDA PROFESSIONAL ENGINEER

4-17-18

Documents Prepared By:
Lyndon F. Schmidt
P.E. No. 43409

R.W. BUILDING CONSULTANTS, INC.
P.O. Box 230, Valrico, FL 33595
Phone No.: 813.659.9197
FBPE C.A. No. 9813

PRODUCT: *FIXED WINDOW*

PART OR ASSEMBLY: *BUCK & FRAME ANCHORING*

NO.	DATE	REVISIONS	BY

DATE: 4/17/18
SCALE: N.T.S.
DWG. BY: JK
CHK. BY: LFS
DRAWING NO.: FL-26908.1
SHEET 3 OF 4

© 2018 R.W. BUILDING CONSULTANTS INC.

R:\Clients\Sunrise Windows\A - Florida Product Approvals\FL-26908 - 7250 Fixed Coastal Window\C - Drawings\FL 26908 (2017)\FL-26908.dwg, 3-5

BILL OF MATERIALS		
ITEM #	DESCRIPTION	MATERIAL
A	1X BUCK (SG >= 0.42)	WOOD
B	2X BUCK (SG >= 0.42)	WOOD
C	1/4" MAX. SHIM SPACE	-
D	1/4" X 2-3/4" PFH ELCO OR ITW CONCRETE SCREW	STEEL
E	MASONRY - 3,000 PSI MIN. CONCRETE CONFORMING TO ACI 301 OR HOLLOW BLOCK CONFORMING TO ASTM C90	CONCRETE
F	#8 X 1-3/4" PPH SMS (1-5/16" MIN. EMBEDMENT)	STEEL
G	1/4" X 2-1/4" PFH ELCO OR ITW CONCRETE SCREW	STEEL
J	STEEL STUD Min. Thk .033" (ASTM A653 GRADE 33 Fy=33 ksi min., Fu=45 ksi min.)	STEEL
K	#10 PPH SELF-DRILLING SMS	STEEL
1	EXTRUDED VINYL FRAME (781)*	RIGID PVC
2	EXTRUDED VINYL GLAZING BEAD (766A)*	RIGID PVC

* THE APPROVED WHITE RIGID PVC EXTERIOR EXTRUSIONS FOR WINDOWS ARE TO BE PRODUCED BY EXTRUDERS LICENSEES IN "AAMA CERTIFICATION PROGRAMS FOR RIGID PVC EXTRUSIONS".

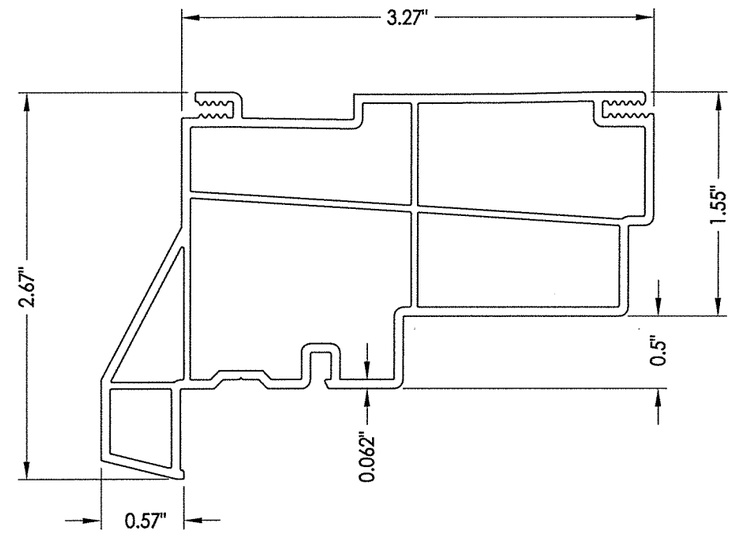

1 FRAME

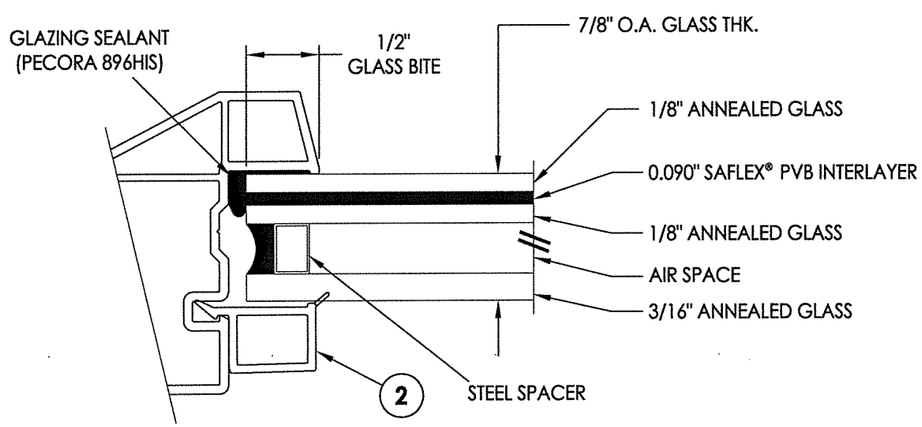

G1 GLAZING DETAIL

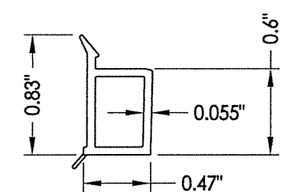

2 GLAZING BEAD

L. F. SCHMIDT LICENSE No. 43409 STATE OF FLORIDA PROFESSIONAL ENGINEER

4-17-18

Documents Prepared By:
Lyndon F. Schmidt
P.E. No. 43409

BUILDING CONSULTANTS, INC.
P.O. Box 230, Valrico, FL 33595
Phone No.: 813.659.9197
FBPE C.A. No. 9813

PRODUCT: FIXED WINDOW

PART OR ASSEMBLY: BILL OF MATERIALS AND GLAZING DETAILS

NO.	DATE	BY

REVISIONS

DATE: 4/17/18
SCALE: N.T.S.
DWG. BY: JK
CHK. BY: LFS
DRAWING NO.: FL-26908.1
SHEET 4 OF 4

© 2018 R.W. BUILDING CONSULTANTS INC.

R:\Clients\Sunrise Windows\A - Florida Product Approvals\FL-26908 - 7250 Fixed Coastal Window\C - Drawings\FL 26908 (2017)\FL-26908.dwg, 4-5